Work Order ID 115021

Monday, March 17, 2014 2:38:47 PM

646.3813 *115021*

Item ID: 646.3813 B115021 **Accept** *N900040100* **Setup Start** *NS1*

Revision ID:

Item Name: Strut Bracket **Stop** *NS2*

Start Date: 3/17/14 **Start Qty:** 10.00 *10* **Cust Item ID:**

Required Date: 3/17/14 **Req'd Qty:** 10.00 *10* **Customer:**

Reference:

Run Start *NR1*

Approvals: **Process Plan:** MLJ **Date:** 14-03-18 **Tooling:** _____ **Date:** _____

Stop *NR2*

QC: _____ **Date:** _____ **SPC (Y/N):** _____ **Date:** _____

Sequence ID/ Work Center ID	Operation Description	Set Up/ Run Hours	Tool ID	Tool #	Plan Code	Accept Qty	Reject Qty	Reject Number	Insp. Stamp

Draw Nbr	Revision Nbr
646.3800	N/C

110 — 0.00

110

Mill Conv

Conventional Milling Machine

HAAS CNC VERTICAL MACHINING #1

Memo — 0.00

1-Machine per DWG

DWG REV: N/C

2- deburr and break all sharp edges

DAS 02 9-89 14-04-13 (410)

120 — QC2- Inspect parts off machine FAI/FAIB — 0.00

120

QC

Quality Control

Memo — 0.00

DAS 02 9-89 14-04-13

DART AEROSPACE

DQA: _____ Date: _____

WORK ORDER NON-CONFORMANCE / UPDATE

QA Closed: Date:

Work Order update only ☐

Work Order: _____

Part No. _____

NCR No. _____

DISPOSITION

- Rework ☐
- Scrap ☐
- Use-as-is ☐
- Suspected Unapproved ☐

AGAINST DEPARTMENT/PROCESS

Skid-tube ☐	Crosstube ☐	Water Jet ☐	Engineering ☐
Machining ☐	Small Fab ☐	Prod. Eng. Coor. ☐	Quality ☐
Thermoforming ☐	Finishing ☐	Rec/Store/Packaging ☐	Other ☐
Large Fab ☐	Composite ☐	Supplier ☐	☐

Root Cause		Date	Step	Qty	Description of work order update or non-conformance	Initial Chief Eng	Action Description	Sign & Date	Verification	QC Inspector
Design	☐									
Doc/Data	☐									
Equip/Tooling	☐									
Handling/Pre	☐									
Material	☐									
Operator	☐									
Offset/Setup	☐									
Process	☐									
Supplier	☐									
Training	☐									
Transport	☐									
Unapproved	☐									

FAULT CATEGORY

Landing Gear

- ☐ Bending
- ☐ Centre Not Concentric
- ☐ Cracks
- ☐ Crimp/Kink/Ripple/Wave
- ☐ Cuffs
- ☐ Crushing
- ☐ Heat Treat
- ☐ Inspection Strip in Tube
- ☐ Marks/Chatter
- ☐ Turning Sequence
- ☐ Wave/Twist in Tube

General

- ☐ Bend
- ☐ BOM/Route
- ☐ Broken/Damage/Defect
- ☐ Burrs
- ☐ Contamination
- ☐ Countersink
- ☐ Cut Too Short
- ☐ Drawing
- ☐ Drill Holes
- ☐ Finish
- ☐ Fit/Function
- ☐ Folio/Program
- ☐ Grain
- ☐ Hardware
- ☐ Inspection Incomplete/Unqualified
- ☐ Instructions Incomplete/Unclear
- ☐ Misaligned/off center
- ☐ Mislabeled
- ☐ Misread
- ☐ Off-set
- ☐ Out of Calibration
- ☐ Out of Sequence
- ☐ Outside Dimensions
- ☐ Over/Under tolerance
- ☐ Part Incorrect
- ☐ Part Lost/Missing
- ☐ Part Moved
- ☐ Positioned Wrong
- ☐ Power Loss/Surge
- ☐ Pressure/Forced
- ☐ Set-up
- ☐ Temperature/Cure
- ☐ Weld
- ☐ Wrong Stock Pulled
- ☐ Other

_____

_____

_____

Work Order ID 115021

Monday, March 17, 2014 2:38:47 PM

115021

Item ID: 646.3813 **Accept** *N9000040100* **Setup Start** *NS1*

Revision ID:

Item Name: Strut Bracket **Stop** *NS2*

Start Date: 3/17/14 **Start Qty:** 10.00 *10* **Cust Item ID:**

Required Date: 3/17/14 **Req'd Qty:** 10.00 *10* **Customer:**

Reference:

Approvals: **Process Plan:** _____ **Date:** _____ **Tooling:** _____ **Date:** _____ **Run Start** *NR1*

QC: _____ **Date:** _____ **SPC (Y/N):** _____ **Date:** _____ **Stop** *NR2*

Sequence ID/ Work Center ID	Operation Description	Set Up/ Run Hours	Tool ID	Tool #	Plan Code	Accept Qty	Reject Qty	Reject Number	Insp. Stamp
130	QC8- Inspect parts - second check	0.00							DAS 25 9-89
130						10			14-4-14
QC	Memo	0.00							
Quality Control									
140	Outsource process-Anodize per QSI017 4.1.10.1	0.00							
140						CZ 14/04/15		10	
Outsource4	Memo	0.00							
Outsource process - Anodize	Issue P/O to ATG : 23813								
	1- Black Anodize as per Dwg 646.3800								
	2- PRIME AS PER DWG, SEE NOTE #2								
	Certification of Comformity is required								
150	Receive & Inspect for Damage & Mat'l Certs	0.00							
150						14/4/25		10	
Packaging	Memo	0.00							
Packaging									

DART AEROSPACE

DQA: _____ Date: _____

WORK ORDER NON-CONFORMANCE / UPDATE

QA Closed: Date:

Work Order update only ☐

	DISPOSITION	AGAINST DEPARTMENT/PROCESS			
Work Order: _____	Rework ☐	Skid-tube ☐	Crosstube ☐	Water Jet ☐	Engineering ☐
Part No. _____	Scrap ☐	Machining ☐	Small Fab ☐	Prod. Eng. Coor. ☐	Quality ☐
	Use-as-is ☐	Thermoforming ☐	Finishing ☐	Rec/Store/Packaging ☐	Other ☐
NCR No. _____	Suspected Unapproved ☐	Large Fab ☐	Composite ☐	Supplier ☐	☐

Root Cause		Date	Step	Qty	Description of work order update or non-conformance	Initial Chief Eng	Action Description	Sign & Date	Verification	QC Inspector
Design	☐									
Doc/Data	☐									
Equip/Tooling	☐									
Handling/Pre	☐									
Material	☐									
Operator	☐									
Offset/Setup	☐									
Process	☐									
Supplier	☐									
Training	☐									
Transport	☐									
Unapproved	☐									

FAULT CATEGORY

Landing Gear	General				
☐ Bending	☐ Bend	☐ Folio/Program	☐ Outside Dimensions	☐ Pressure/Forced	
☐ Centre Not Concentric	☐ BOM/Route	☐ Grain	☐ Over/Under tolerance	☐ Set-up	
☐ Cracks	☐ Broken/Damage/Defect	☐ Hardware	☐ Part Incorrect	☐ Temperature/Cure	
☐ Crimp/Kink/Ripple/Wave	☐ Burrs	☐ Inspection Incomplete/Unqualified	☐ Part Lost/Missing	☐ Weld	
☐ Cuffs	☐ Contamination	☐ Instructions Incomplete/Unclear	☐ Part Moved	☐ Wrong Stock Pulled	
☐ Crushing	☐ Countersink	☐ Misaligned/off center	☐ Positioned Wrong		
☐ Heat Treat	☐ Cut Too Short	☐ Mislabeled	☐ Power Loss/Surge	☐ Other	
☐ Inspection Strip in Tube	☐ Drawing	☐ Misread			
☐ Marks/Chatter	☐ Drill Holes	☐ Off-set			
☐ Turning Sequence	☐ Finish	☐ Out of Calibration			
☐ Wave/Twist in Tube	☐ Fit/Function	☐ Out of Sequence			

Work Order ID 115021

Monday, March 17, 2014 2:38:47 PM

115021

Item ID: 646.3813 **Accept** *N900040100* **Setup Start** *NS1*

Revision ID:

Item Name: Strut Bracket **Stop** *NS2*

Start Date: 3/17/14 **Start Qty:** 10.00 *10* **Cust Item ID:**

Required Date: 3/17/14 **Req'd Qty:** 10.00 *10* **Customer:**

Reference:

Run Start *NR1*

Approvals: **Process Plan:** _____ **Date:** _____ **Tooling:** _____ **Date:** _____

Stop *NR2*

QC: _____ **Date:** _____ **SPC (Y/N):** _____ **Date:** _____

Sequence ID/ Work Center ID	Operation Description	Set Up/ Run Hours	Tool ID	Tool #	Plan Code	Accept Qty	Reject Qty	Reject Number	Insp. Stamp
155	QC5- Inspect part completeness to step on W/O	0.00 DAS 27 9-89							
155 QC Quality Control	Memo	0.00 14/4/29							
180	Identify as per dwg & Stock Location: 51525	0.00							
180 Packaging Packaging	Memo ***IDENTIFY AS PER APICAL MPP-120 BY STAMPING P# AND REV***	0.00				10X	DAS 28 9-89	APR 2 8 2014	
190	QC21- Final Inspection - Work Order Release	0.00							
190 QC Quality Control	Memo	0.00					14/4/29		

14-04-28

DART AEROSPACE

DQA: _____ Date: _____

WORK ORDER NON-CONFORMANCE / UPDATE

QA Closed: Date:

Work Order update only ☐

Work Order: _____

Part No. _____

NCR No. _____

DISPOSITION

- Rework ☐
- Scrap ☐
- Use-as-is ☐
- Suspected Unapproved ☐

AGAINST DEPARTMENT/PROCESS

Skid-tube ☐	Crosstube ☐	Water Jet ☐	Engineering ☐
Machining ☐	Small Fab ☐	Prod. Eng. Coor. ☐	Quality ☐
Thermoforming ☐	Finishing ☐	Rec/Store/Packaging ☐	Other ☐
Large Fab ☐	Composite ☐	Supplier ☐	☐

Root Cause		Date	Step	Qty	Description of work order update or non-conformance	Initial Chief Eng	Action Description	Sign & Date	Verification	QC Inspector
Design	☐									
Doc/Data	☐									
Equip/Tooling	☐									
Handling/Pre	☐									
Material	☐									
Operator	☐									
Offset/Setup	☐									
Process	☐									
Supplier	☐									
Training	☐									
Transport	☐									
Unapproved	☐									

FAULT CATEGORY

Landing Gear

- ☐ Bending
- ☐ Centre Not Concentric
- ☐ Cracks
- ☐ Crimp/Kink/Ripple/Wave
- ☐ Cuffs
- ☐ Crushing
- ☐ Heat Treat
- ☐ Inspection Strip in Tube
- ☐ Marks/Chatter
- ☐ Turning Sequence
- ☐ Wave/Twist in Tube

General

- ☐ Bend
- ☐ BOM/Route
- ☐ Broken/Damage/Defect
- ☐ Burrs
- ☐ Contamination
- ☐ Countersink
- ☐ Cut Too Short
- ☐ Drawing
- ☐ Drill Holes
- ☐ Finish
- ☐ Fit/Function
- ☐ Folio/Program
- ☐ Grain
- ☐ Hardware
- ☐ Inspection Incomplete/Unqualified
- ☐ Instructions Incomplete/Unclear
- ☐ Misaligned/off center
- ☐ Mislabeled
- ☐ Misread
- ☐ Off-set
- ☐ Out of Calibration
- ☐ Out of Sequence
- ☐ Outside Dimensions
- ☐ Over/Under tolerance
- ☐ Part Incorrect
- ☐ Part Lost/Missing
- ☐ Part Moved
- ☐ Positioned Wrong
- ☐ Power Loss/Surge
- ☐ Pressure/Forced
- ☐ Set-up
- ☐ Temperature/Cure
- ☐ Weld
- ☐ Wrong Stock Pulled
- ☐ Other

_____

_____

_____

Picklist Print

Monday, March 17, 2014 2:38:47 PM

Work Order ID: 115021

115021

Parent Item: 646.3813

646.3813

Parent Item Name: Strut Bracket

Start Date: 3/17/14 **Required Date:** 3/17/14

Start Qty: 10.00 **Required Qty:** 10.00

Comments: IPP REV:A NEW ISSUE 12-10-22 JLM VERIFIED:DD

Component Item ID/ Item Name	Replacement Item ID	Mfg/ Purch	Bin Item	Primary Location	Last Location	Route Seq ID	Unit of Measure	Qty on Hand	Qty per Kit	Total Qty	Qty Issued	Date Issued	Status
M7075T6A0.75X0.75X 0.060X0.060		Purchased	No				f	0.0000		1.157895			

*M7075T6A0.75X0.75X0.060X0

7075T6 ANGLE .75" X .75" X .060" X .062"W

123947

** 3.0'

DAS 02 9-89 14-04-13

DART AEROSPACE

DQA: _____ Date: _____

WORK ORDER NON-CONFORMANCE / UPDATE

QA Closed: Date:

Work Order update only ☐

Work Order: _____

Part No. _____

NCR No. _____

DISPOSITION

- Rework ☐
- Scrap ☐
- Use-as-is ☐
- Suspected Unapproved ☐

AGAINST DEPARTMENT/PROCESS

Skid-tube ☐	Crosstube ☐	Water Jet ☐	Engineering ☐
Machining ☐	Small Fab ☐	Prod. Eng. Coor. ☐	Quality ☐
Thermoforming ☐	Finishing ☐	Rec/Store/Packaging ☐	Other ☐
Large Fab ☐	Composite ☐	Supplier ☐	☐

Root Cause		Date	Step	Qty	Description of work order update or non-conformance	Initial Chief Eng	Action Description	Sign & Date	Verification	QC Inspector
Design	☐									
Doc/Data	☐									
Equip/Tooling	☐									
Handling/Pre	☐									
Material	☐									
Operator	☐									
Offset/Setup	☐									
Process	☐									
Supplier	☐									
Training	☐									
Transport	☐									
Unapproved	☐									

FAULT CATEGORY

Landing Gear

- ☐ Bending
- ☐ Centre Not Concentric
- ☐ Cracks
- ☐ Crimp/Kink/Ripple/Wave
- ☐ Cuffs
- ☐ Crushing
- ☐ Heat Treat
- ☐ Inspection Strip in Tube
- ☐ Marks/Chatter
- ☐ Turning Sequence
- ☐ Wave/Twist in Tube

General

- ☐ Bend
- ☐ BOM/Route
- ☐ Broken/Damage/Defect
- ☐ Burrs
- ☐ Contamination
- ☐ Countersink
- ☐ Cut Too Short
- ☐ Drawing
- ☐ Drill Holes
- ☐ Finish
- ☐ Fit/Function
- ☐ Folio/Program
- ☐ Grain
- ☐ Hardware
- ☐ Inspection Incomplete/Unqualified
- ☐ Instructions Incomplete/Unclear
- ☐ Misaligned/off center
- ☐ Mislabeled
- ☐ Misread
- ☐ Off-set
- ☐ Out of Calibration
- ☐ Out of Sequence
- ☐ Outside Dimensions
- ☐ Over/Under tolerance
- ☐ Part Incorrect
- ☐ Part Lost/Missing
- ☐ Part Moved
- ☐ Positioned Wrong
- ☐ Power Loss/Surge
- ☐ Pressure/Forced
- ☐ Set-up
- ☐ Temperature/Cure
- ☐ Weld
- ☐ Wrong Stock Pulled
- ☐ Other

_____

_____

_____

DART AEROSPACE LTD	Work Order:	115021
Description: strut bracket	Part Number:	646.3813
Inspection Dwg: 646.3800 Rev: N/C		Page 1 of 1

FIRST ARTICLE INSPECTION CHECKLIST

Drawing Dimension	Tolerance	Actual Dimension	Accept	Reject	Method of Inspection	Comments
0.06	+/- 0.010	0.063	✓		vern	FT-4
R 0.06	"	0.060	✓			
0.03	"	0.026	✓			
0.63	"	0.632	✓			
0.75	"	0.751	✓			
2.95	"	2.950	✓			
2.61	"	2.610	✓			
R 0.06	"	0.060	✓			
2.45	"	2.450	✓			
3.6°	+/- 0.5°	3.6°	✓			
113.6°	"	113.6°	✓			

Measured by:	DAS 02 ~~9-89~~	Audited by:	DAS 25 ~~9-89~~	Preliminary Approval:	
Date:	14-04-13	Date:	14-4-14	Date:	

Rev	Date	Change	Revised by	Approved
E	10.04.14	Added preliminary approval	KJ	

10.04.15

APICAL INDUSTRIES, INC.	ENGINEERING CHANGE NOTICE NO. 03697				SHEET 1 OF 1
	DWG NO. 646.3800	REV: N/C	PREPARED BY B. PETERS	DATE: 11/14/12	EFFECT ON DWG ☐ INC. ☒ UNINC.
	DWG TITLE: BRACKETS				
	APPROVED BY: ENGR	MFG David Baker	QC		EFF: NEXT ORDER
TRANSACTION CODES (TC): A-ADD C-CREATE R-REVISE D-DELETE	REASON: ADDED ALTERNATE MATERIAL.			ECR: D-12-006	

IS

1 PRIMARY MATERIAL: 7075-T651 ALUMINUM PER AMS-QQ-A-250/12.
ALTERNATE MATERIAL: 7075-T6511 ALUMINUM PER AMS-QQ-A-200/11.

115021 MLJ
1403-18

SHEET 1, ZONE A2 IS:

F/N	TC	PART NUMBER	QTY	DESCRIPTION	MATERIAL	SPECIFICATION

DOCUMENTS EFFECTED:	CHANGE CATEGORY	DER REVIEW REQUIRED
☐ RFMS ☐ MDL ☐ INSTALL INSTRUC ☐ ICA ☐ BOM	☐ MAJOR ☒ MINOR	☐ YES ☒ NO

THE INFORMATION CONTAINED IN THIS DRAWING IS THE SOLE PROPERTY OF APICAL INDUSTRIES. ANY REPRODUCTION IN PART OR WHOLE WITHOUT THE WRITTEN PERMISSION OF APICAL INDUSTRIES IS PROHIBITED.

REVISIONS			
REV	DESCRIPTION	DATE	APPROVED

NOTES:

1. MATERIAL: ALUMINUM 7075-T651 AMS-QQ-A-250/12
2. FINISH: HARD ANODIZE IAW MIL-A-8625 TYPE III, CLASS 2, COLOR BLACK; CARDINAL 4860-50 PRETREATMENT PRIMER PRIME IAW MIL-P-23377J TYPE I CLASS N
3. DEBURR AND BREAK ALL SHARP EDGES
4. IDENTIFY IAW MPP-120

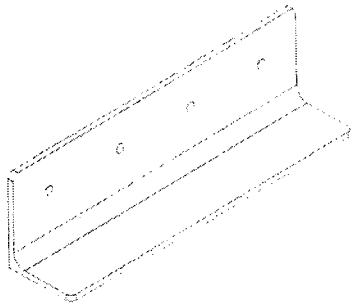

646.3810

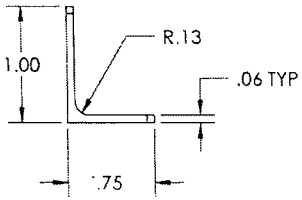

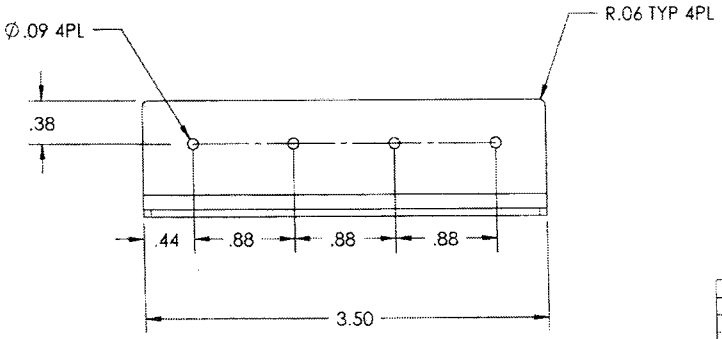

UNINCORPORATED EC(3)

03697

QTY	FIND #	PART #	DESCRIPTION	MAT'L	SPEC.
		646.3814	WIPER BRACKET	1	2
		646.3813	STRUT BRACKET	1	2
		646.3812	GUSSET BRACKET	1	2
		646.3811	RADIUS BLOCK	1	2
		646.3810	BRACKET	1	2

PARTS LIST

NEXT ASSY (S): 646.4000

ORIGINAL DATE: 06-19-08
DRAWN BY: J GARDNER
CHECKED: P BRAVO
DRAWING APPROVAL: P BRAVO 06/19/08
ECO/REPRINT NO:

UNLESS OTHERWISE SPECIFIED DIMENSIONS ARE IN INCHES
TOLERANCES ARE:
2 PLACE DECIMALS ± 0.10
3 PLACE DECIMALS ± .005
ANGLES ± 5°

APICAL INDUSTRIES
2608 TEMPLE HEIGHTS DR.
OCEANSIDE, CA. 92056-3512 (760)724-5300

BRACKETS

SIZE	CAGE CODE	DWG NO	REV.
B	07MZ6	646.3800	N/C

SCALE: NONE SHEET 1 OF 5

THE INFORMATION CONTAINED IN THIS DRAWING IS THE SOLE PROPERTY OF APICAL INDUSTRIES. ANY REPRODUCTION IN PART OR WHOLE WITHOUT THE WRITTEN PERMISSION OF APICAL INDUSTRIES IS PROHIBITED.

REVISIONS			
REV.	DESCRIPTION	DATE	APPROVED

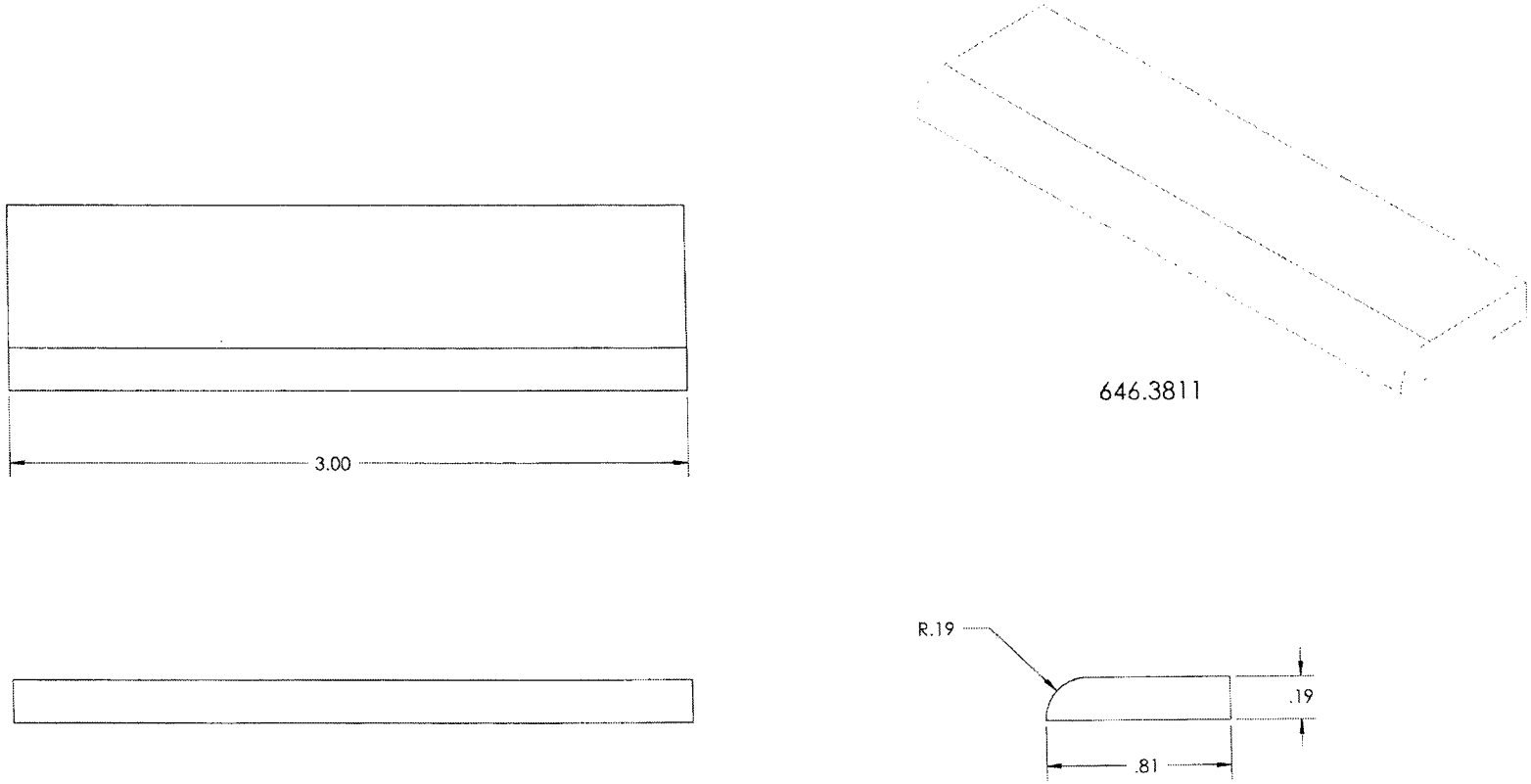

NEXT ASSY (S)	ORIGINAL DATE (MM-DD-YR) 06-19-06	APICAL INDUSTRIES 2608 TEMPLE HEIGHTS DR. OCEANSIDE, CA. 92056-3512 (760)724-5300
	DRAWN BY J GARDNER	CHECKED
	DRAWING APPROVAL	BRACKETS
	CONTROL CTL No.	
	UNLESS OTHERWISE SPECIFIED DIMENSIONS ARE IN INCHES TOLERANCES ARE 2 PLACE DECIMALS ± 0.10 3 PLACE DECIMALS ± 0.005 ANGLES ± 1°	SIZE B · CAGE CODE 07M26 · DWG. NO. 646.3800 · REV N/C SCALE NONE · SHEET 2 OF 5

THE INFORMATION CONTAINED IN THIS DRAWING IS THE SOLE PROPERTY OF APICAL INDUSTRIES. ANY REPRODUCTION IN PART OR WHOLE WITHOUT THE WRITTEN PERMISSION OF APICAL INDUSTRIES IS PROHIBITED.

REVISIONS

REV	DESCRIPTION	DATE	APPROVED

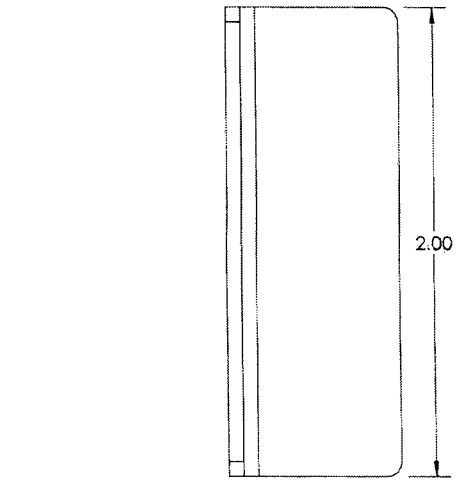

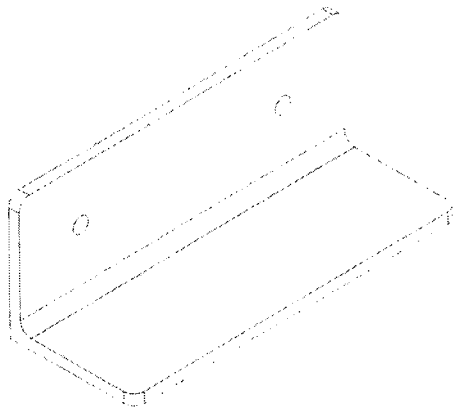

646.3812

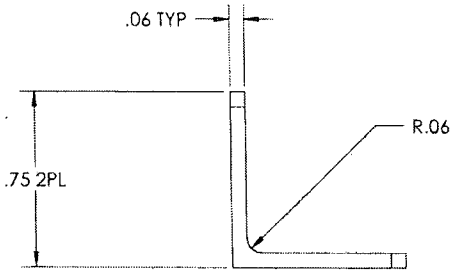

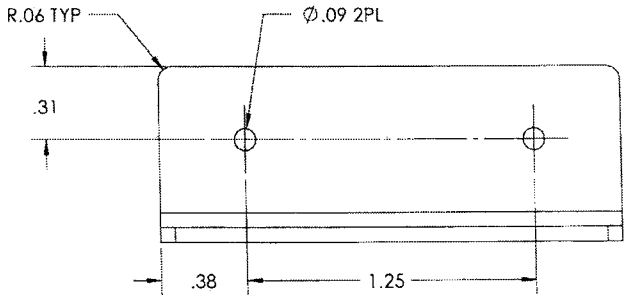

NEXT ASSY (S)	ORIGINAL DATE 06-17-08 / LAST DATE	APICAL INDUSTRIES 2608 TEMPLE HEIGHTS DR. OCEANSIDE, CA. 92056-3512 (760)724-5300
	DRAWN BY J GARDNER / CHECKED	BRACKETS
	DRAWING APPROVAL	
	CONTRACT NO.	
	UNLESS OTHERWISE SPECIFIED DIMENSIONS ARE IN INCHES TOLERANCES ARE: 2 PLACE DECIMALS ±.010 3 PLACE DECIMALS ±.005 ANGLES ± .5°	SIZE B / CAGE CODE 07MZ6 / DWG. NO. 646.3800 / REV N/C SCALE NONE / SHEET 3 OF 5

THE INFORMATION CONTAINED IN THIS DRAWING IS THE SOLE PROPERTY OF APICAL INDUSTRIES. ANY REPRODUCTION IN PART OR WHOLE WITHOUT THE WRITTEN PERMISSION OF APICAL INDUSTRIES IS PROHIBITED.

REVISIONS			
REV	DESCRIPTION	DATE	APPROVED

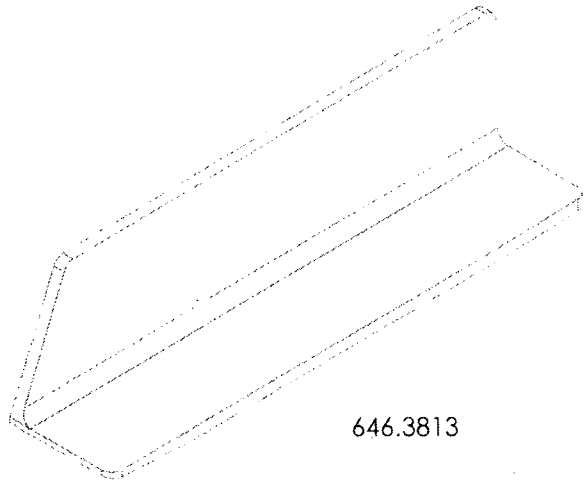

646.3813

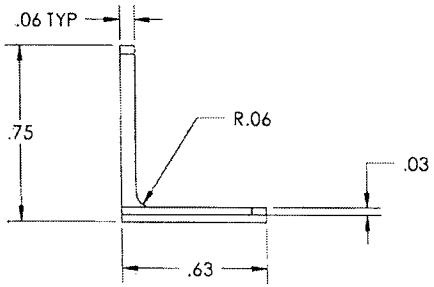

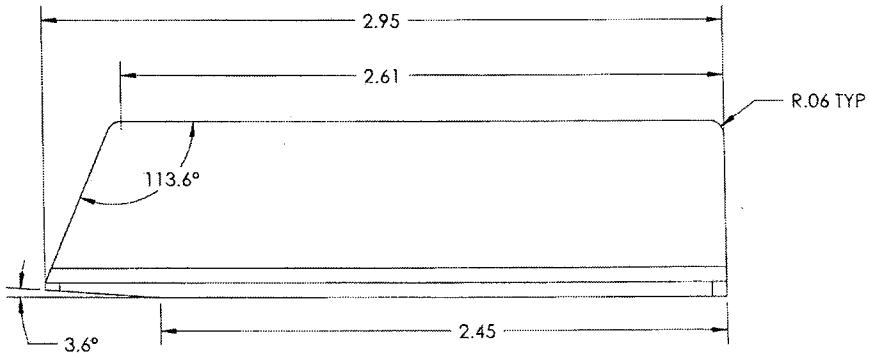

NEXT ASSY (S)	ORIGINAL DATE (MM-DD-YY) 05 19 08	APICAL INDUSTRIES 2608 TEMPLE HEIGHTS DR. OCEANSIDE, CA. 92056-3512 (760)724-5300
	DRAWN BY J CARDNER / CHECKED *	
	DRAWING APPROVAL	BRACKETS
	COMPACT NO	
	UNLESS OTHERWISE SPECIFIED DIMENSIONS ARE IN INCHES TOLERANCES ARE: 2 PLACE DECIMALS ±.010, 3 PLACE DECIMALS ±.003, ANGLES ± .5°	SIZE B / CAGE CODE 07AZ6 / DWG NO. 646.3800 / REV N/C SCALE NONE / SHEET 4 OF 5

THE INFORMATION CONTAINED IN THIS DRAWING IS THE SOLE PROPERTY OF APICAL INDUSTRIES. ANY REPRODUCTION IN PART OR WHOLE WITHOUT THE WRITTEN PERMISSION OF APICAL INDUSTRIES IS PROHIBITED.

REVISIONS			
REV	DESCRIPTION	DATE	APPROVED

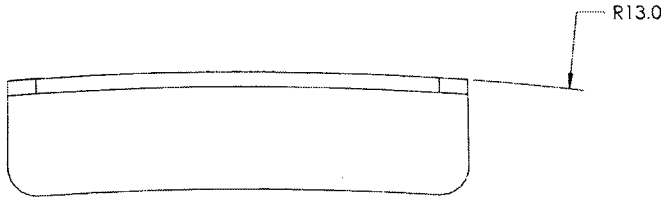

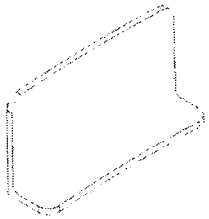

646.3814

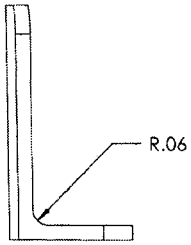

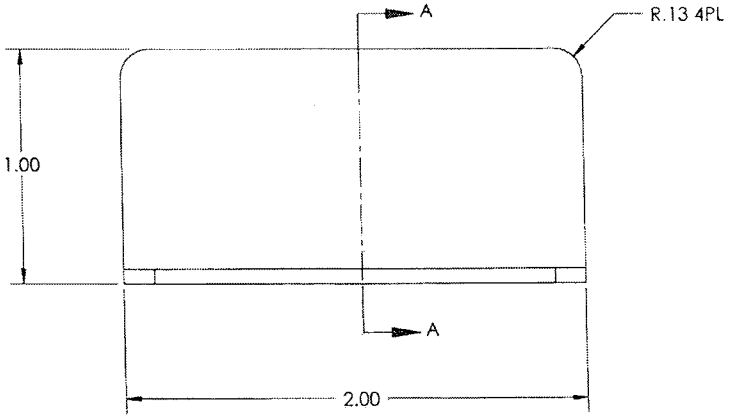

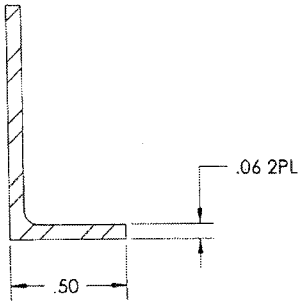

SECTION A-A

NEXT ASSY (S):	ORIGINAL DATE (MM-DD-YR) 08-19-08	APICAL INDUSTRIES 2608 TEMPLE HEIGHTS DR. OCEANSIDE, CA. 92056-3512 (760)724-5300
	DRAWN BY J.CAPONEP / CHECKED	
	DRAWING APPROVAL	BRACKETS
	CONTRACT No.	
	UNLESS OTHERWISE SPECIFIED DIMENSIONS ARE IN INCHES TOLERANCES ARE 2 PLACE DECIMALS ± .010 3 PLACE DECIMALS ± .005 ANGLES ± .5°	SIZE B · CAGE CODE 07M26 · DWG NO 646.3800 · REV N/C SCALE NONE · SHEET 5 OF 5

Dart Aerospace Ltd.
1270 Aberdeen Street
Hawkesbury, ON K6A 1K7
Tel: 613 632 9577
Fax: 613 632 1053

PURCHASE ORDER

Purchase Order ID **PO23813**

Purchase Order Date 4/15/2014
PO Print Date 4/25/2014

Order From : VC-ATG001

A.T.G. INDUSTRIES INC.
731 INDUSTRIELLE ROAD
ROCKLAND, ON K4K 1T2
CANADA

Ship To : DART AEROSPACE LTD

1270 ABERDEEN
HAWKESBURY, ON K6A 1K7
CANADA

Contact Name
Vendor Phone 613-446-4544

Ship To Contact
Ship To Phone
Ship Via: VENDOR'S TRUCK
Ship Acct:

Buyer
Customer POID
Customer Tax # 10127-2607
Terms Net 30
Currency CAD
FOB FCA – (Free Carrier)

Line Total: **$32.75**

4	114936	646.3812 GUSSET BRACKET	5/7/2014	10.00	$6.10	$61.00
			Yes 5/7/2014			

FINISH: HARD BLACK ANODIZE AS PER IAW MIL-A-8625 TYPE III, CLASS 2 / PRIME AS PER IAW MIL-P-23377J TYPE 1 CLASS N

Line Total: **$61.00**

5	112932	646.3813 STRUT BRACKET	5/7/2014	6.00	$6.10	$36.60
			Yes 5/7/2014			

FINISH: HARD BLACK ANODIZE AS PER IAW MIL-A-8625 TYPE III, CLASS 2 / PRIME AS PER IAW MIL-P-23377J TYPE 1 CLASS N

Line Total: **$36.60**

6	115021	646.3813 STRUT BRACKET	5/7/2014	10.00	$6.10	$61.00
			Yes 5/7/2014			

FINISH: HARD BLACK ANODIZE AS PER IAW MIL-A-8625 TYPE III, CLASS 2 / PRIME AS PER IAW MIL-P-23377J TYPE 1 CLASS N

Note:

A.T.G. Industries Inc.
731, rue Industrielle Rd.
PLATING DEPARTMENT
Rockland, On K4K 1T2
Canada
Ph: (613) 446-4544
Fax: (613) 446-4556

Pack List

Number: 63000 Date: 24-Apr-14

To

DART AEROSPACE LTD
1270 ABERDEEN ST.
HAWKESBURY, ON K6A 1K7
Canada

Ph: 613-632-5200 Fax: 613-632-1185

Ship To

DART AEROSPACE LTD
1270 ABERDEEN ST.
HAWKESBURY, ON K6A 1K7
Canada

Ph: 613-632-5200 Fax: 613-632-1185

Terms	Ship Via

Quantity	Description
1 lot	Part: ASST Rev: 20 PCS 646.3313 (13.10) 11 PCS 646.3810 (6.55) 10 PCS 646.3812 (6.10) 16 PCS 646.3813 (6.10) 6 t/o 12 PCS 646.9811 (32.60) 10 PCS 646.9812 (18.15) 4 PCS 647.9410 (10.70) 8 PCS 647.9411 (24.50) HARD ANODIZE BLACK MIL-A-8625 TYPE III CLASS 2 PRIME MIL-P-23377J TYPE I CLASS N 3 PCS D2224 (2.00) RED ANODIZE MIL-A-8625 TYPE II CLASS 2 PRICE IS PER PIECE Job: 20140236 PO: 23813 Line:
	Certificate of Conformance A.T.G. Industries certifies that all items in this shipment are in conformance with all requirements, specifications and drawings referenced in the purchase order. ISO 9001 : 2008 REGISTERED ATG SALES-2010 TERMS APPLY DATE : 24/4/14 CERTIFIED SIGNATURE : _____ RECEIVER SIGNATURE : _____